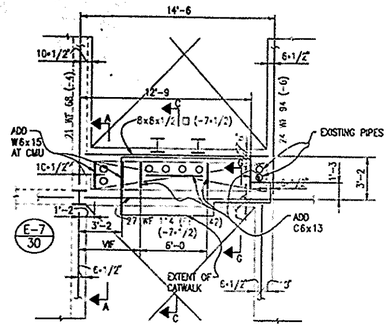

PART PLAN FLOOR 9

REF EL = 423'-8

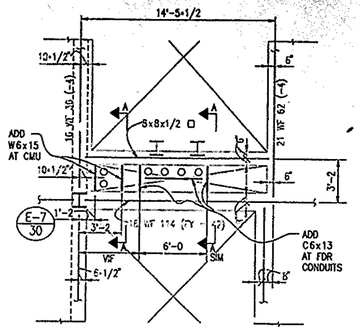

PART PLAN FLOOR 6, 7 & 8

REF EL= 410'-8 FLOOR 8
398'-8 FLOOR 7
386'-8 FLOOR 6

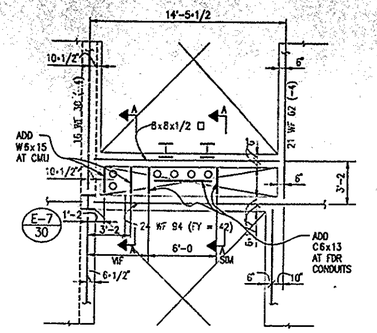

PART PLAN FLOOR 5

REF EL = 374'-8

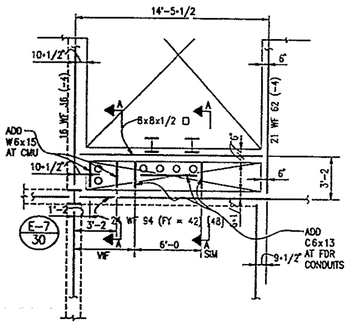

PART PLAN FLOOR 4

REF EL = 359'-0

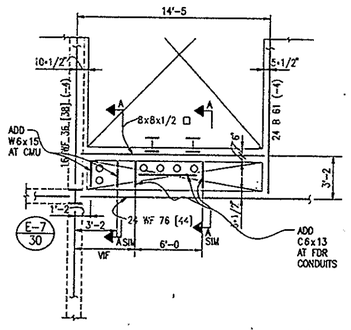

PART PLAN FLOOR 3

REF EL = 347'-0

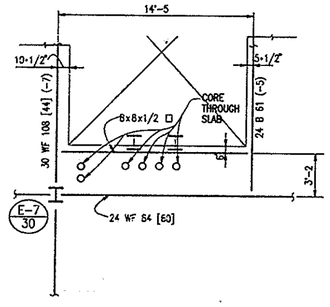

PART PLAN FLOOR 2 (PLAZA)

REF EL = 332'-0

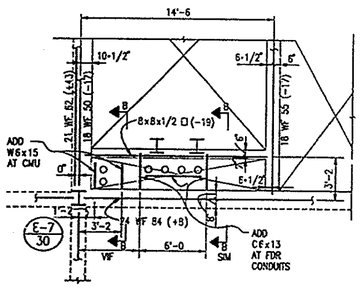

PART PLAN FLOOR 1 (CONCOURSE)

REF EL = 310'-0

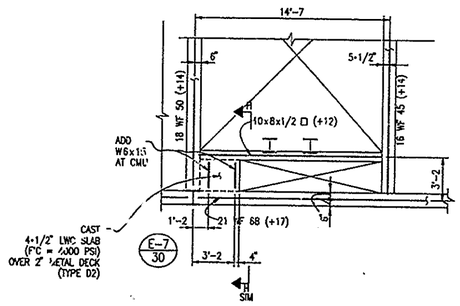

PART FRAMING PLAN

REF EL = 299'-0

NOTES:

1. EXISTING FRAMING IS SHOWN FADED.
2. CONTRACTOR SHALL SURVEY THE WORK SITE AND VERIFY LOCATION OF EXISTING SUPPORTING BEAMS, SLABS AND PARTITION WALLS.
3. DETAILS IN THIS DWG SHOW ADDED STRUCTURAL STEEL FOR THE SUPPORT OF CMU AT FUEL OIL LINES AND STRUCTURAL STEEL WHICH ACTUAL ELECTRICAL CONDUIT CONDUIT SUPPORTS CONNECT TO. COORDINATE THIS WORK WITH AT ARCHITECTURAL AND ELECTRICAL WORK.
4. DETAILS IN THIS DWG SHOW CONFIGURATION THAT ACCOMMODATE CONTEMPLATED FIELD CONDITIONS. NOT ALL CONDITIONS HAVE BEEN CONTEMPLATED. CONTRACTOR SHALL PROPOSE ALTERNATIVE DETAIL CONFIGURATIONS AS REQUIRED TO ACCOMMODATE ACTUAL CONDITIONS.
5. ANCHOR BOLTS ARE 1/2" ø HILTI KWIK BOLTS WITH 1-1/2 EMBEDMENT AND 2" MINIMUM EDGE SPACING U.O.N.

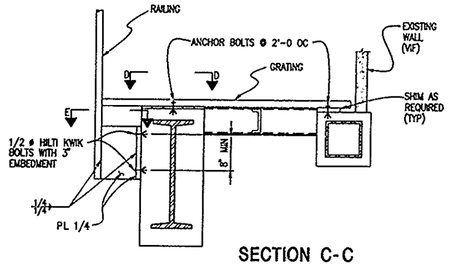

SECTION C-C

NTS

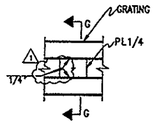

SECTION D-D

NTS

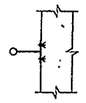

SECTION E-E

NTS

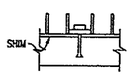

SECTION F-F

NTS

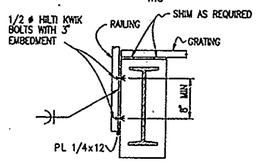

SECTION G-G

NTS

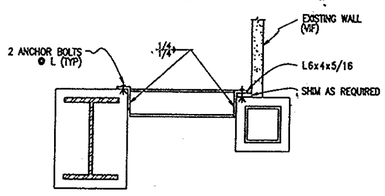

SECTION A-A

NTS

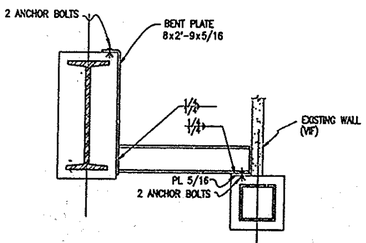

SECTION B-B

NTS

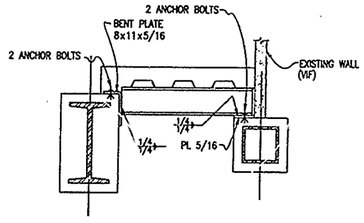

SECTION H-H

NTS

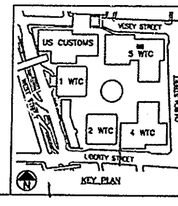

Sheet 38 of 112

THE PORT AUTHORITY OF NY & NJ

ORIGINAL SIGNED & SEALED BY N.Y. P.E. (OR R.A.)

Joseph R. Lofing & Associates, Inc.
consulting engineers
One Pennsylvania Plaza
New York, New York 10119-0045
Tel: (212) 563-7400, Fax: (212) 563-7962

THE OFFICE OF DAVID ELLIOT LEBOWITZ PC
ARCHITECTS + PLANNERS
70 WEST 40TH STREET NEW YORK NY 10018
TEL 212.869.6700 FAX 212.719.0380

LESLIE E ROBERTSON ASSOCIATES, R.L.L.P.
CONSULTING STRUCTURAL ENGINEERS
250 EAST 40TH STREET
NEW YORK, NY 10016-2003
TEL 212.953.5700 FAX 212.953.5032

I HEREBY CERTIFY THAT THIS IS A TRUE AND CORRECT COPY OF ONE OF THE CONTRACT DRAWINGS CONSTITUTING A PART OF CONTRACT NO. WTC-945.071 IN THE FORM IN WHICH SAID DRAWINGS EXISTED AT THE TIME THE SAID CONTRACT WAS EXECUTED BY THE PARTIES.

DATE 1/16/98 SPEC WRITER
DATE 4/10/98 ENGINEER OF DESIGN

No.	Date	Revision	Approved
1	12/12/97	CLARIFY WELD SYMBOL	
	11/17/97	ISSUED FOR BID	

Engineering Department
Design Divisions

The World Trade Center

Title
STANDBY POWER
5 WORLD TRADE CENTER

STRUCTURAL

5 WTC PRIMARY FEEDERS PART PLANS

This drawing subject to conditions in contract. All inventions, ideas, designs and methods herein are reserved to Port Authority and may not be used without it's written consent.

MVS Designed by | BAZ Drawn by | RZ Checked by

Date 11/17/97 | Scale AS NOTED

Contract Number WTC-945.071 | Drawing Number S4-01